Transparent Hierarchical Mobility Agents

THEMA

Pete McCann, Tom Hiller, Jin Wang, Alessio Casati,
Charles Perkins, Pat Calhoun
March 1999

Outline

- Micro-mobility schemes
- The Case for Transparency
- THEMA
- Technology Convergence

Micro-Mobility Schemes

- FA-AAA complex controls a domain
- Fine-grained mobility management within a domain

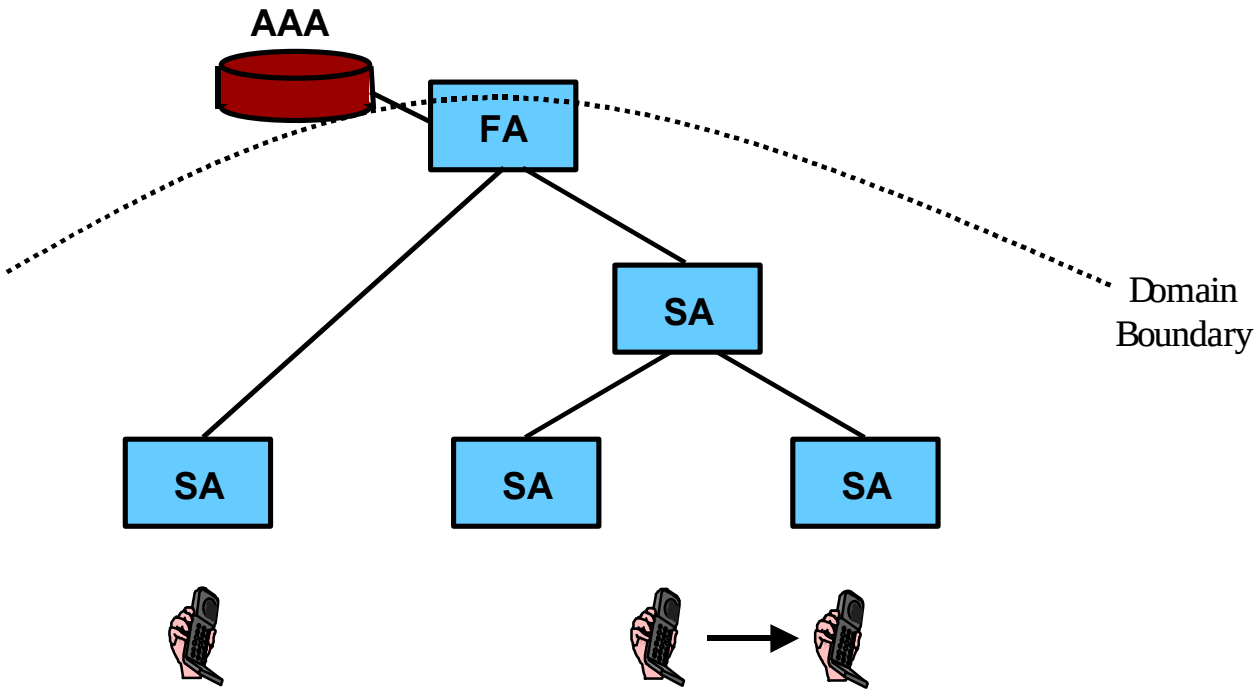

The Case for Transparency

- **No New Messages**
  - Rely on link-layer establishment
  - Carrier network retains control over route to FA
- **Illusion of direct, link-layer connectivity**
  - Support for zero and private addresses
  - FA-located Care-of Address

THEMA

- Link-layer connection triggers tunnel establishment
- Link-layer identifiers sent in registration request

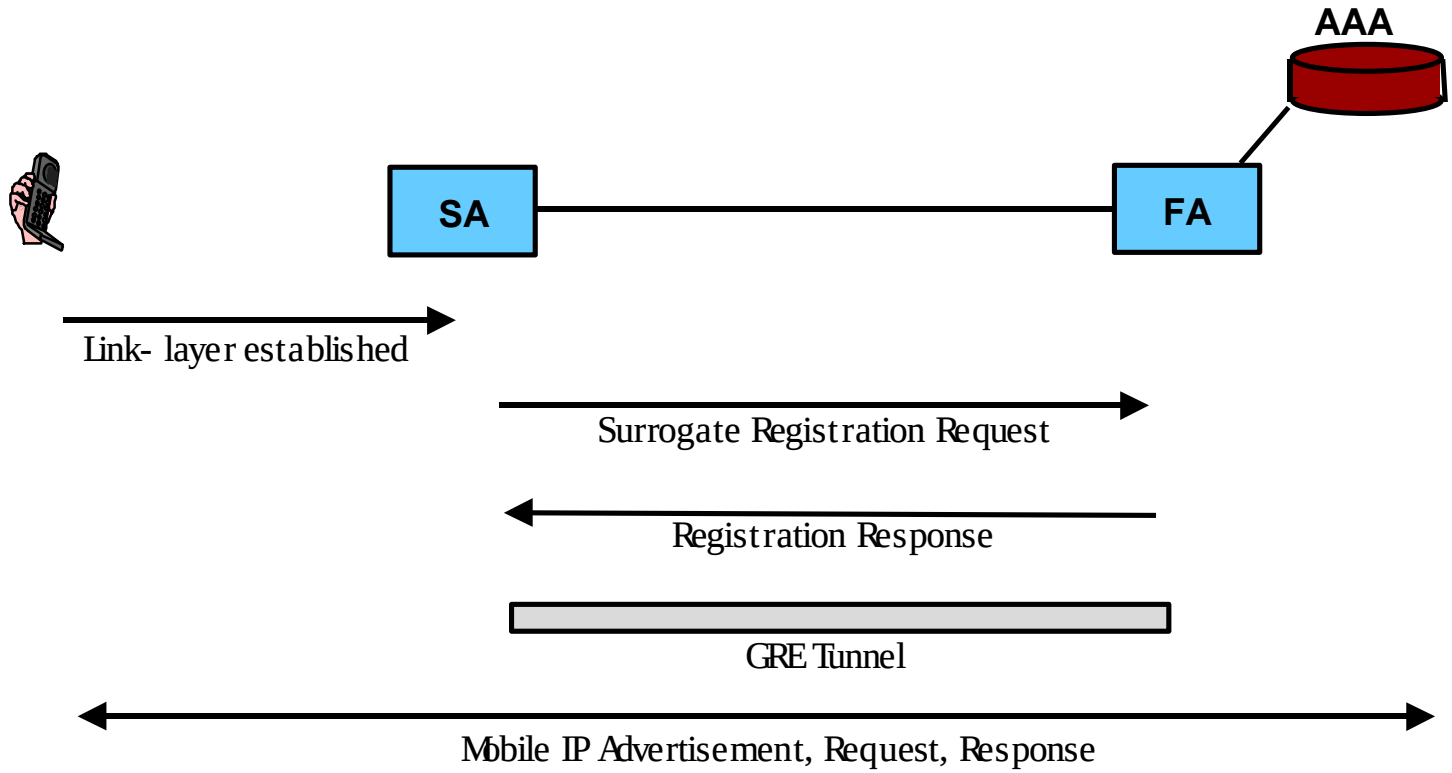

THEMA Home Network

- **Home Agent - Home Link Separation**

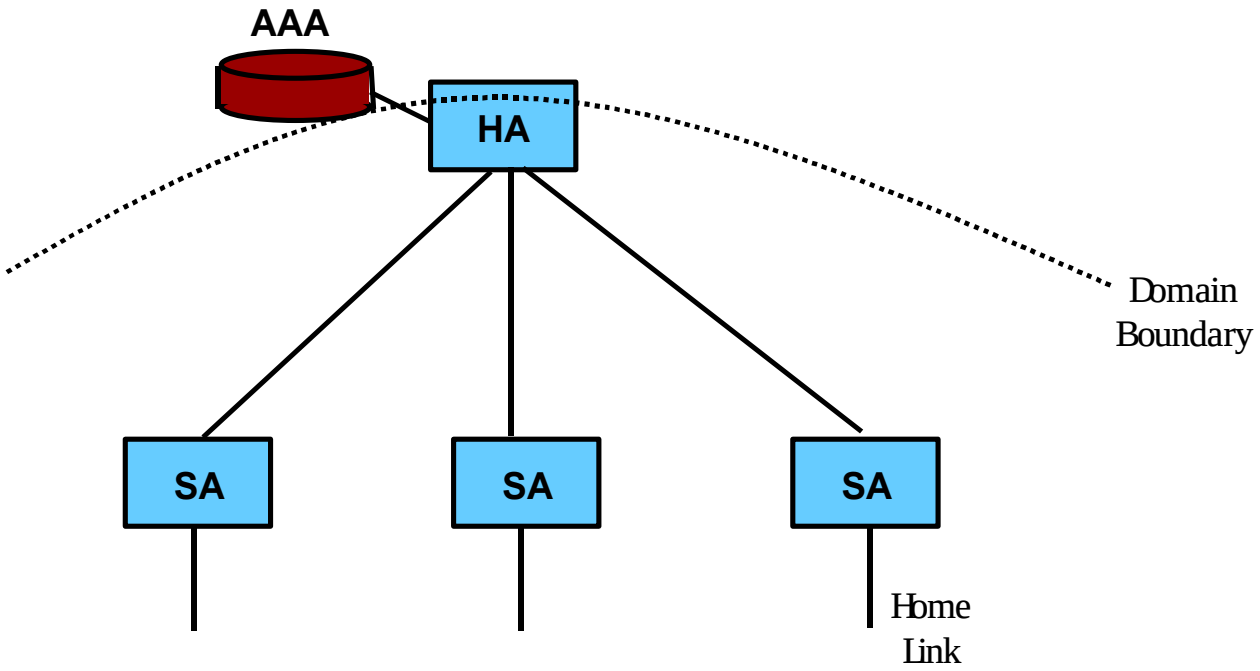

Registration Extensions

- **Link-layer address**
  - Ethernet or IMSI
  - Used only in the foreign network

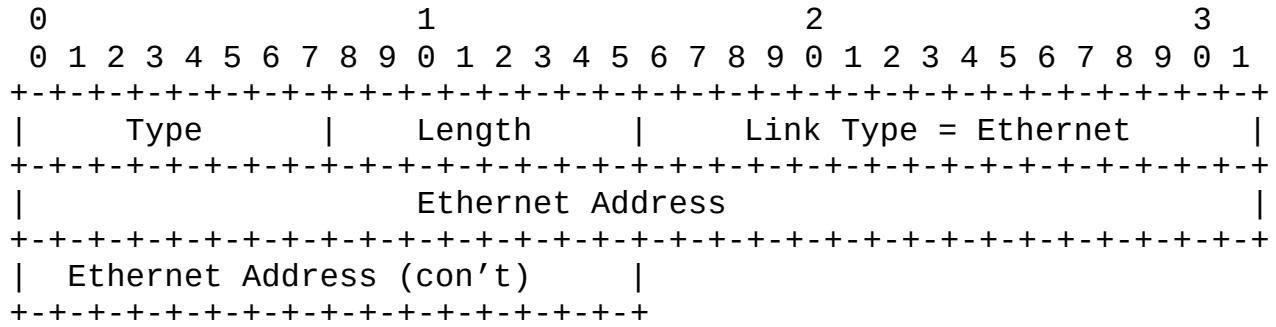

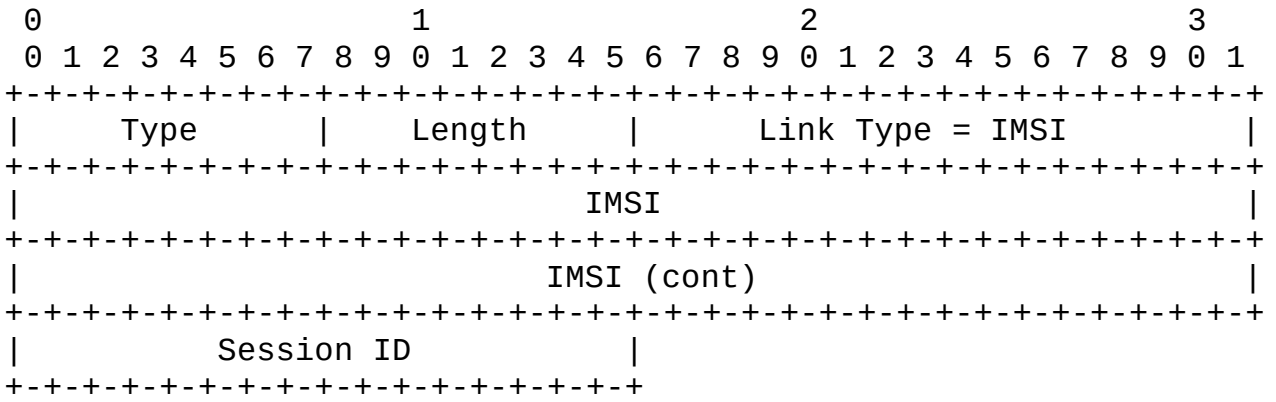
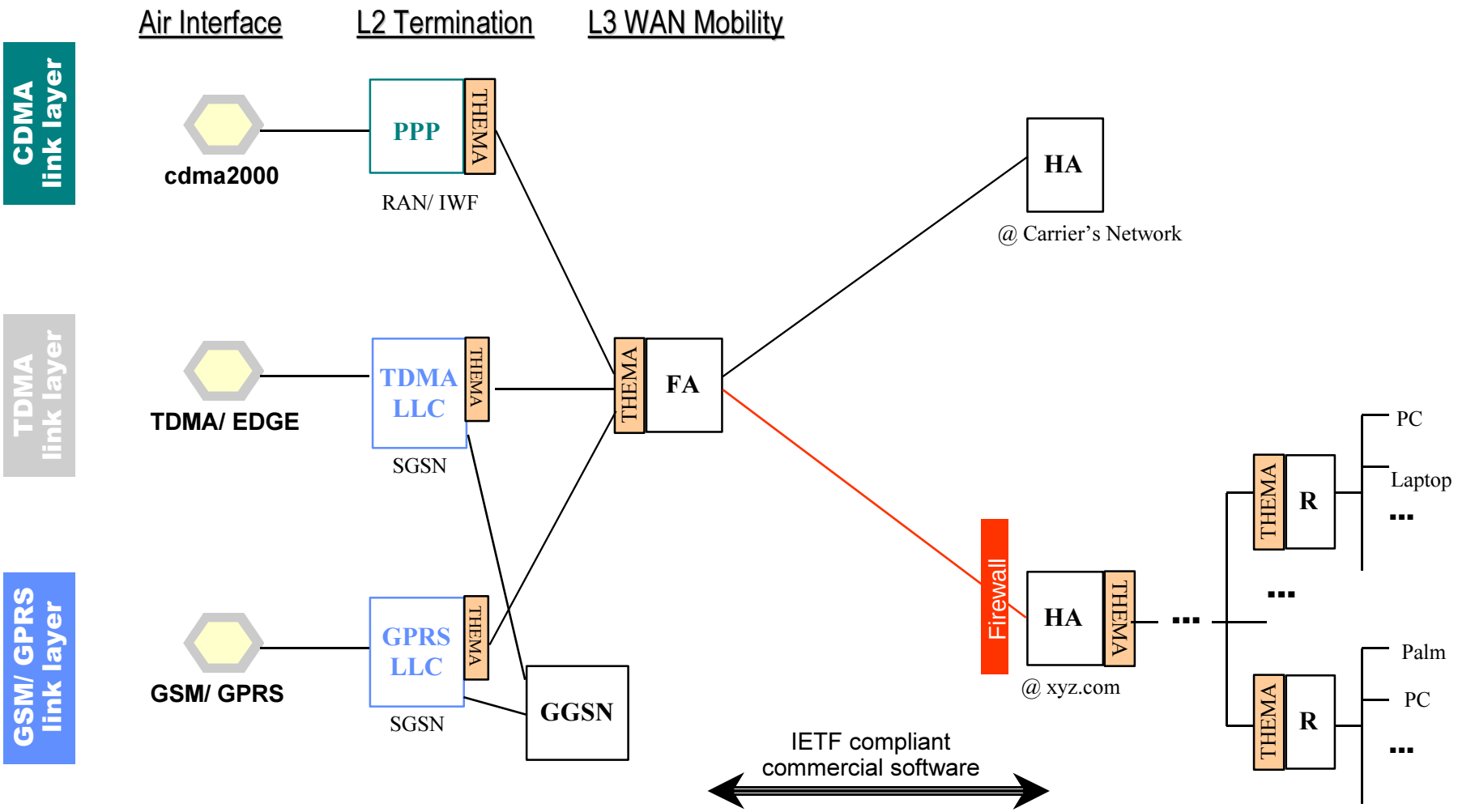
Technology Convergence