LDP extensions for Explicit Pseudowire to transport LSP mapping

draft-cao-pwe3-mpls-tp-pw-over-bidir-lsp-03.txt

Mach Chen (mach.chen@huawei.com)
Wei Cao (wayne.caowei@huawei.com)
Attila Takacs (Attila.Takacs@ericsson.com)
Ping Pan (ppan@infinera.com)

Problem Statement

- Today,
  - A bi-directional connection creates two PW's, which may use two independent LSPs as PSN Tunnels
  - The PE's select and bind PW's to PSN Tunnel, with no control plane support
- Here is the new service requirements:
  - mapping bi-directional circuits to bi-directional LSP's (or co-routed LSP's)

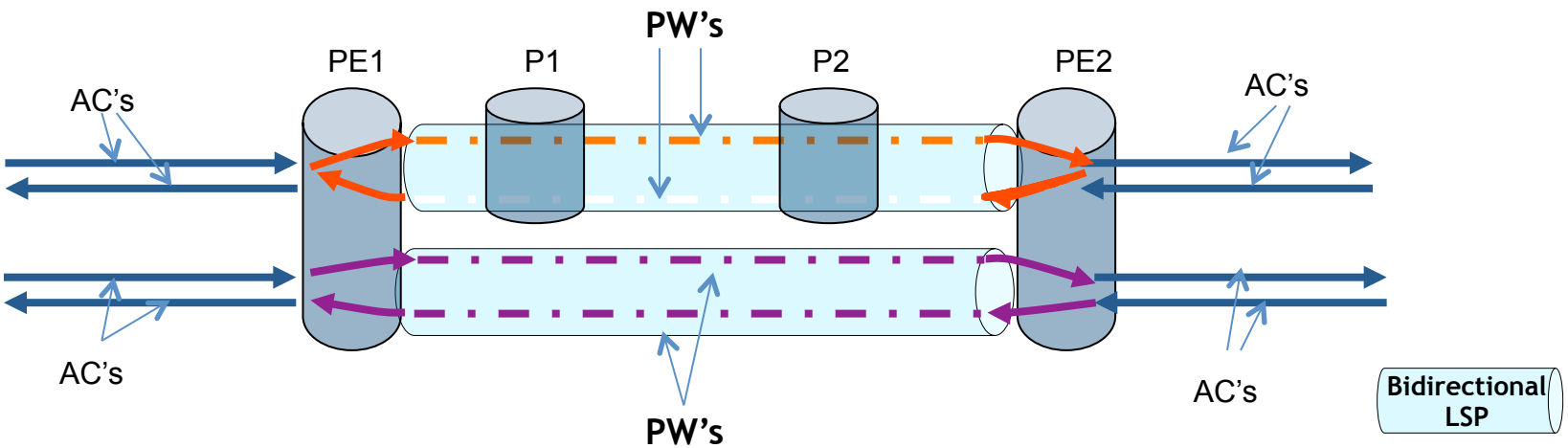

Need to have explicit control over PW-LSP binding at control-plane

Solution Overview (Single-Hop)
(Strict Mode)

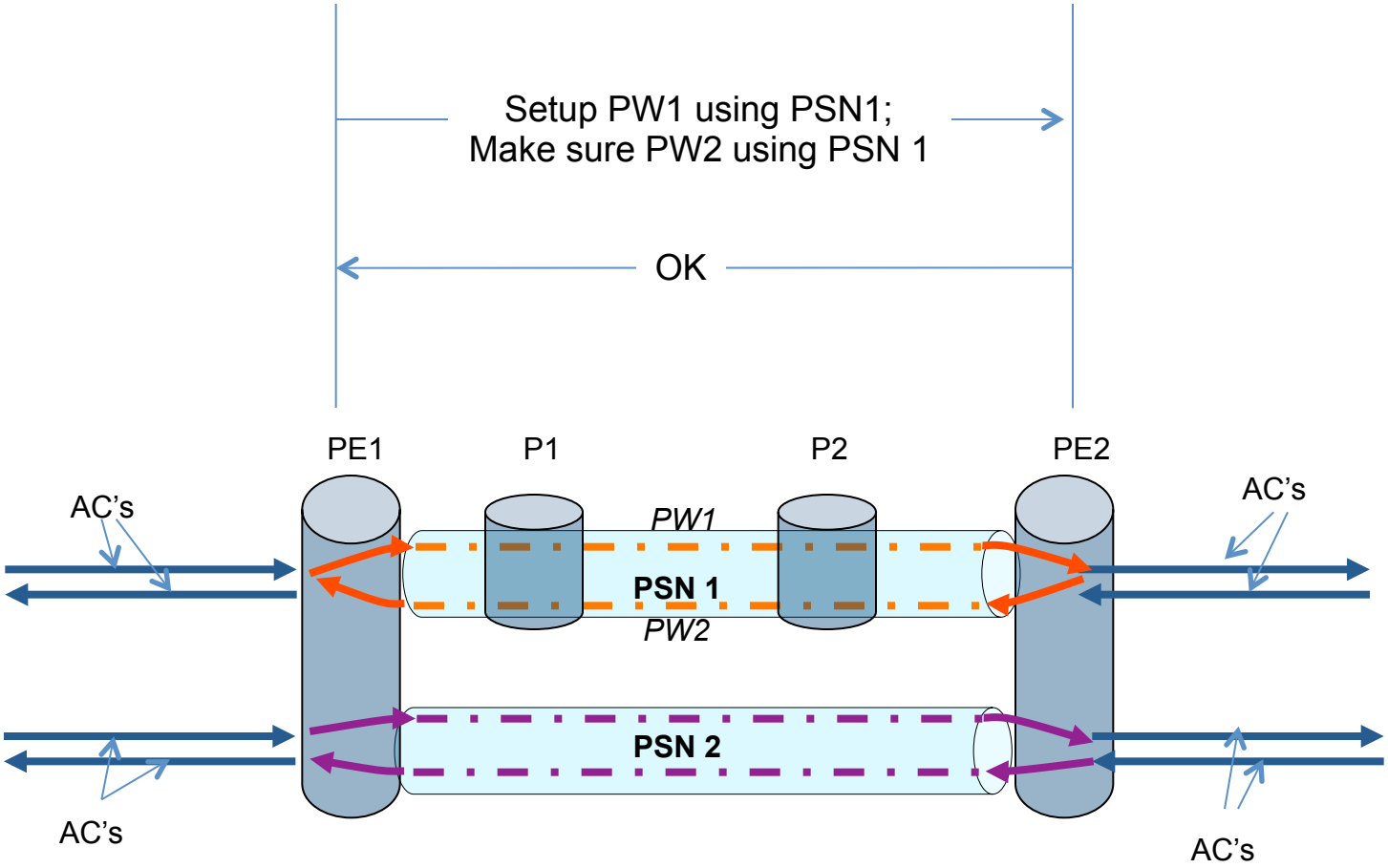

Solution Overview (Single-Hop)
(Congruent Mode)

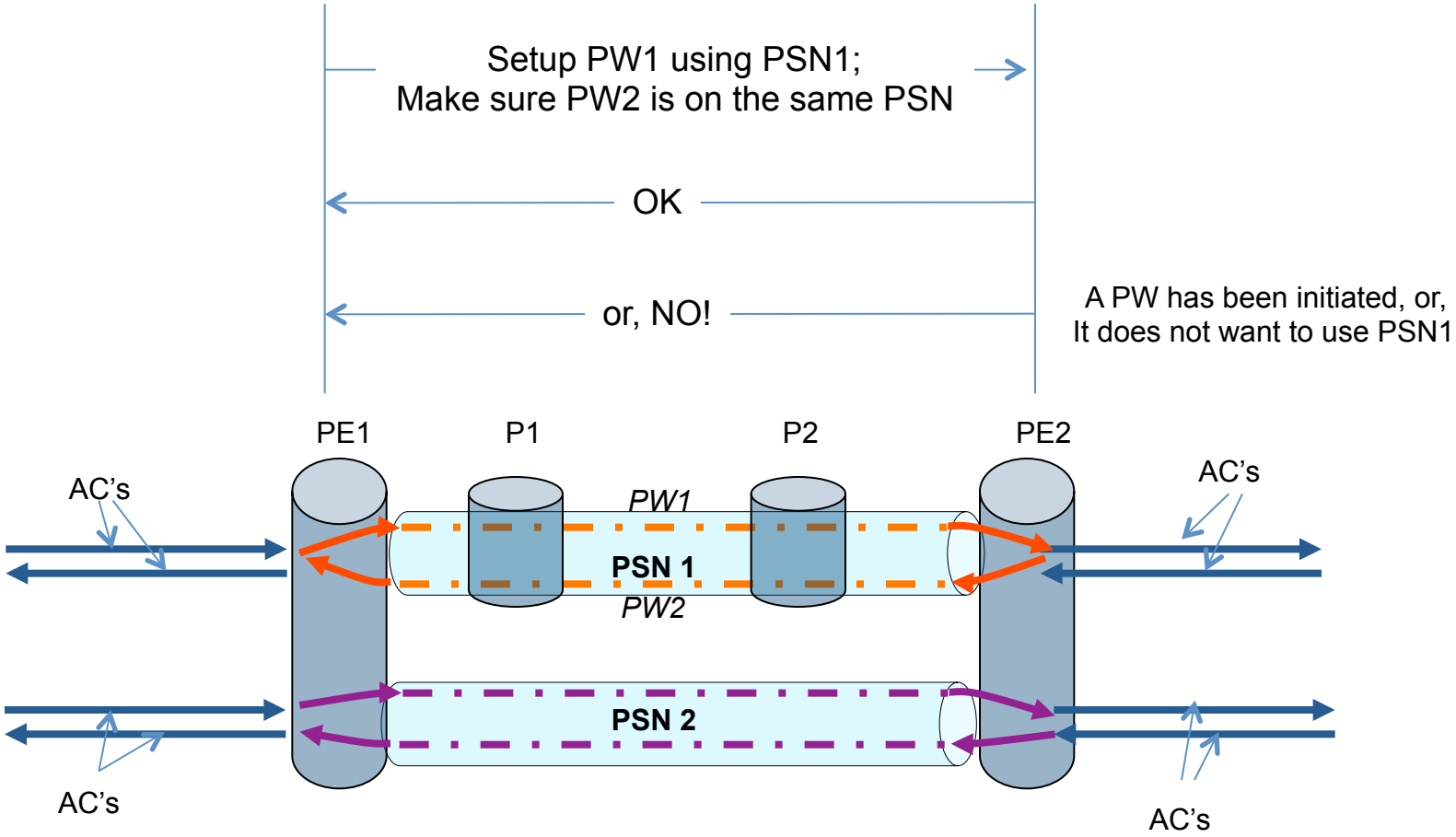

Solution Overview: Tunnel Representation

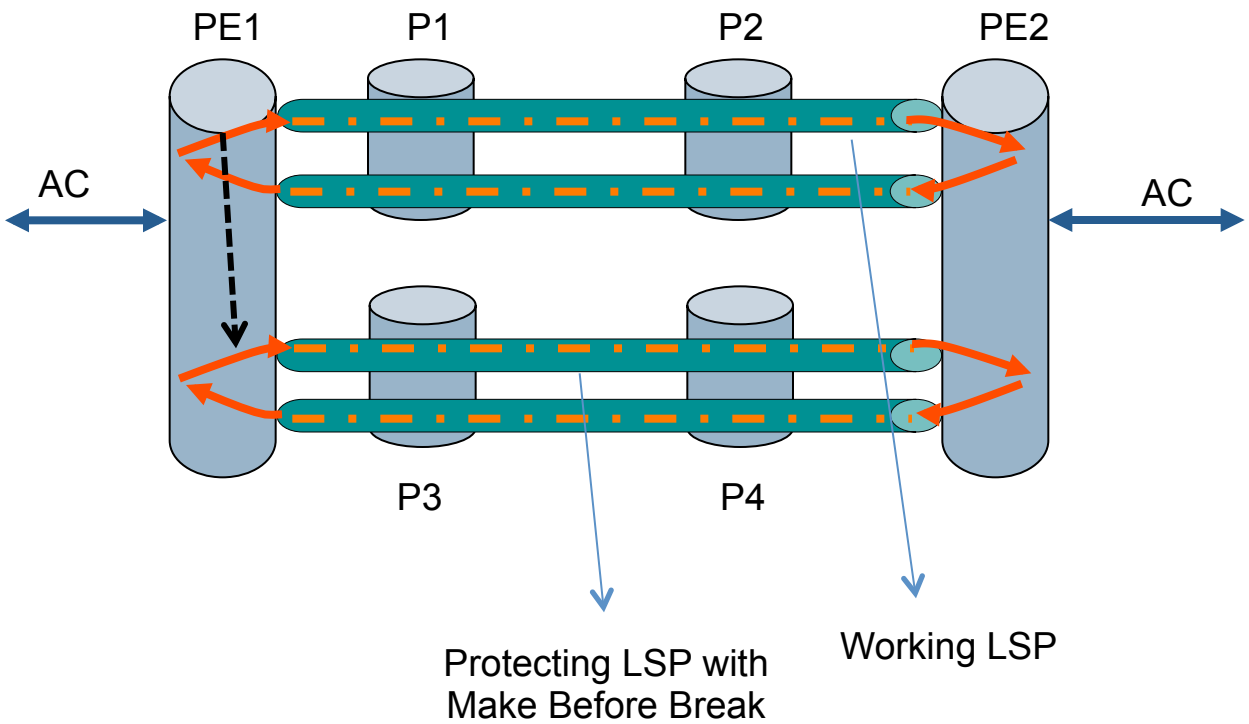

- For Make-before-break LSP's, the Tunnel-ID's are the same
- No need to signal LSP-id, if a PSN has protection
  - Also, this avoids LDP PW re-signaling overhead
- The protocol needs to have the option to signal Tunnel-ID only

Solution Overview (Multi-Segment)
(Strict Mode)

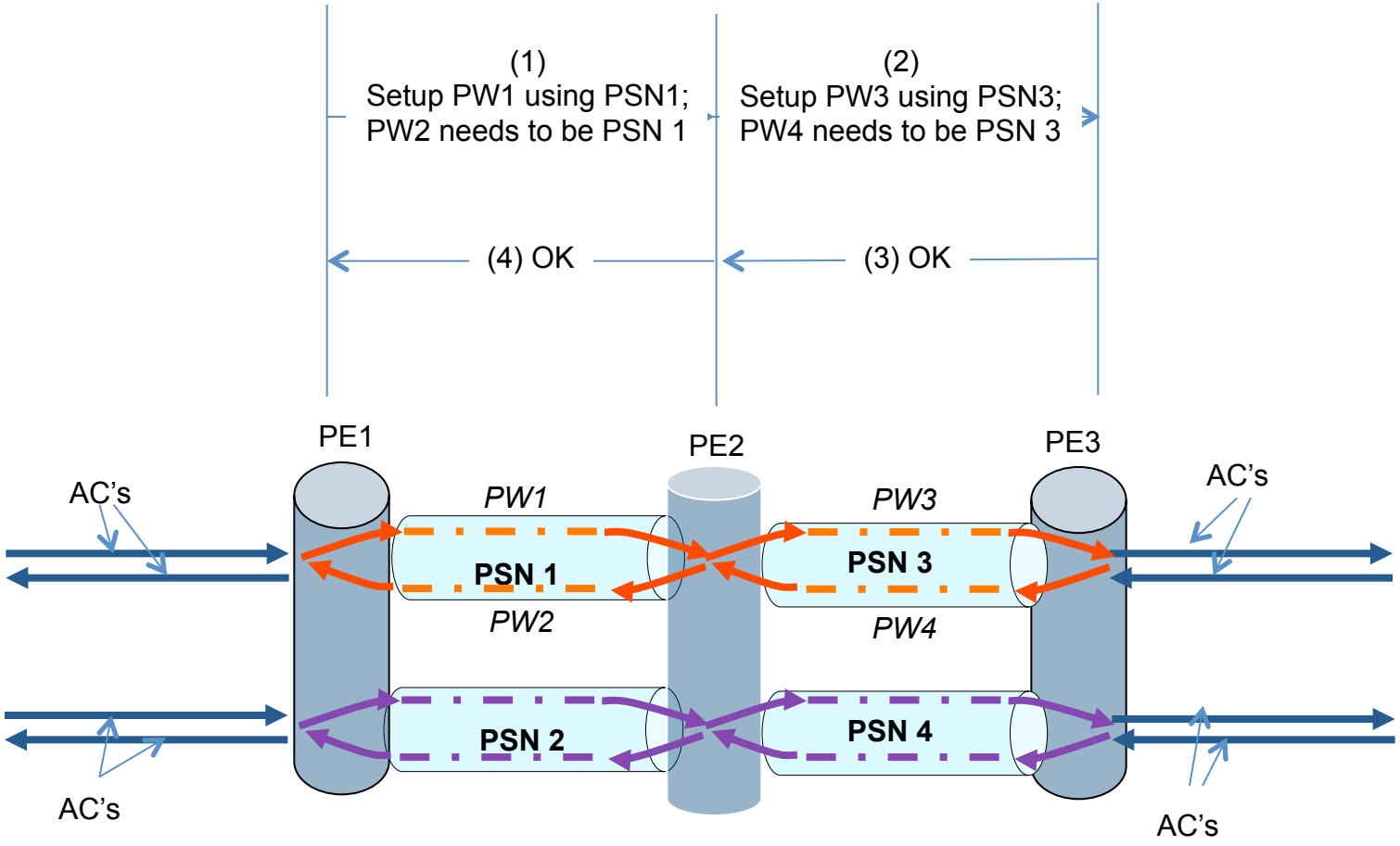

Protocol Extension

- Made significant changes based on the feedback from last IETF and mailing list
- PSN Tunnel Binding TLV

```
 0                   1                   2                   3
 0 1 2 3 4 5 6 7 8 9 0 1 2 3 4 5 6 7 8 9 0 1 2 3 4 5 6 7 8 9 0 1
+-+-+-+-+-+-+-+-+-+-+-+-+-+-+-+-+-+-+-+-+-+-+-+-+-+-+-+-+-+-+-+-+
|1|1| PSN Tunnel Binding (TBA)  |              Length           |
+-+-+-+-+-+-+-+-+-+-+-+-+-+-+-+-+-+-+-+-+-+-+-+-+-+-+-+-+-+-+-+-+
|               Flag            |             Reserved          |
+-+-+-+-+-+-+-+-+-+-+-+-+-+-+-+-+-+-+-+-+-+-+-+-+-+-+-+-+-+-+-+-+
~                        PSN Tunnel Sub-TLV                     ~
+-+-+-+-+-+-+-+-+-+-+-+-+-+-+-+-+-+-+-+-+-+-+-+-+-+-+-+-+-+-+-+-+
```

- IPv4 PSN Tunnel sub-TLV format

```
 0                   1                   2                   3
 0 1 2 3 4 5 6 7 8 9 0 1 2 3 4 5 6 7 8 9 0 1 2 3 4 5 6 7 8 9 0 1
+-+-+-+-+-+-+-+-+-+-+-+-+-+-+-+-+-+-+-+-+-+-+-+-+-+-+-+-+-+-+-+-+
|0|0| IPv4 PSN Tunnel sub-TLV   |           TLV Length          |
+-+-+-+-+-+-+-+-+-+-+-+-+-+-+-+-+-+-+-+-+-+-+-+-+-+-+-+-+-+-+-+-+
|                       Source Global ID                        |
+-+-+-+-+-+-+-+-+-+-+-+-+-+-+-+-+-+-+-+-+-+-+-+-+-+-+-+-+-+-+-+-+
|                        Source Node ID                         |
+-+-+-+-+-+-+-+-+-+-+-+-+-+-+-+-+-+-+-+-+-+-+-+-+-+-+-+-+-+-+-+-+
|      Source Tunnel Number     | Source LSP Number (optional)  |
+-+-+-+-+-+-+-+-+-+-+-+-+-+-+-+-+-+-+-+-+-+-+-+-+-+-+-+-+-+-+-+-+
|                     Destination Global ID                     |
+-+-+-+-+-+-+-+-+-+-+-+-+-+-+-+-+-+-+-+-+-+-+-+-+-+-+-+-+-+-+-+-+
|                      Destination Node ID                      |
+-+-+-+-+-+-+-+-+-+-+-+-+-+-+-+-+-+-+-+-+-+-+-+-+-+-+-+-+-+-+-+-+
|   Destination Tunnel Number   | Destination LSP Number (opt.) |
+-+-+-+-+-+-+-+-+-+-+-+-+-+-+-+-+-+-+-+-+-+-+-+-+-+-+-+-+-+-+-+-+
```

Protocol in Summary

- Support two types of PW's
  - SS-PW: both PEs could be Active or Passive
  - MS-PW (FEC 129 only): always active from the headend
- Binding Types:
  - Strict binding (S-bit MUST be set)
  - Congruent binding(C-bit MUST be set)
  - C-bit and S-bit MUST be mutually exclusive from each other

Next steps

- Comments?
- WG document?